SD125-1 SOUNDER - STAINLESS STEEL

Zones 1, 2, 21, 22

ACOUSTIC SIGNALLING DEVICES | **ZONES 1, 2 (gas) & 21, 22 (dust)**

SD125-1 Sounder in stainless steel, certified for use in explosive atmosphere, zone 1 & 2 for gas and zone 21 & 22 for dust. It is dedicated for Oil & Gas, chemical, petrochemical, pharmacy industries, marine and offshore applications.

It's designed for corrosive environnements and hazardous area.

This sounder, according to user control system, can be set with one tone among 59 prerecorded tones.

It is possible to control the sounder via a telephone line.

EU-Type Examination Certificate

ITEM REFERENCES		
Designation:	Voltage:	Item No.:
SD 125-1 12-48 VDC	12...48V DC	3C0504
SD 125-1 100-240 VAC	100...240V AC (50/60hz)	3C0506
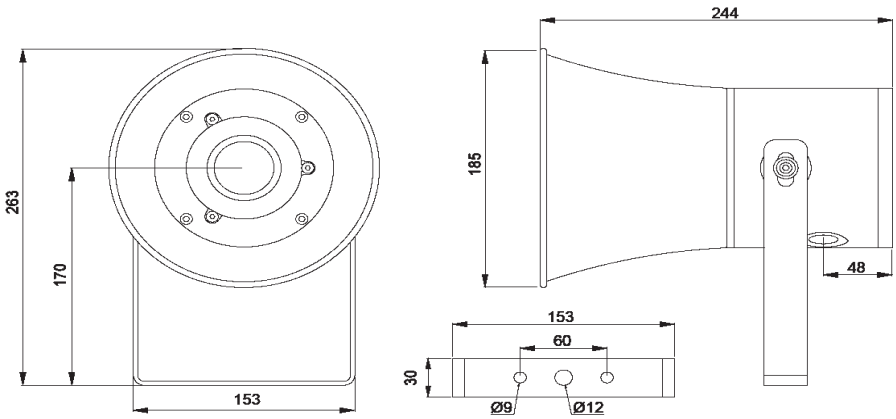
TECHNICAL SPECIFICATIONS	
Marking:	II 2G Ex d IIC T4~T6 Gb II 2D Ex tb IIIC T135°C~T85°C IP66
Certificate:	EU-Type Examination Certificate
Housing:	ENCLOSURE & BRACKET: Stainless Steel 316L
Housing colour:	Standard: Red (RAL 3001) On request: Black (RAL 9004) | Yellow (RAL 1018) | Blue (RAL 5005)
Operating temperature:	-40°C to +55°C (T6) / -40°C to +60°C (T5) / -40°C to +70°C (T4)
Ambient humidity:	Until 95%
Consumption:	Adjustable from 5 to 25 W (factory setting 20W)
Noise level:	Until 115 dB at 1 m
Current consumption:	0.5 to 1 A
Weight:	6,2 kg
Ingress protection:	IP66/67
Cable entries:	2xM20x1,5 holes